Introduction to MTEnergy Technology

June 2025

Andiva Tech

Andiva Tech BV

MTEnergy Technology

- What is MTEnergy Technology
- Why MTEnergy Technology
- Technology fundamentals
- Implementation options
- MTEnergy Technology in RF energy applications
- Performance
- Conclusions
- Questions

What is MTEnergy Technology?

MTEnergy is an innovative measurement technology , enabling novel characterization and control features, unattainable by the current, state-of-the-art RF/MW energy generators and systems.

The technology provides a mechanism for resolving the ambiguity in the **characterization of the individual RF signals** applied in the multichannel, coherent RF/MW energy systems, **without causing disturbances** in the executed process.

The technology applies **multi-tone RF signals**, which comprise of a **single large-level tone and few small-level ones**. The MT signals are generated by applying appropriate angle modulation techniques, ensuring that **the tones' parameters are correlated**.

What is MTEnergy Technology?

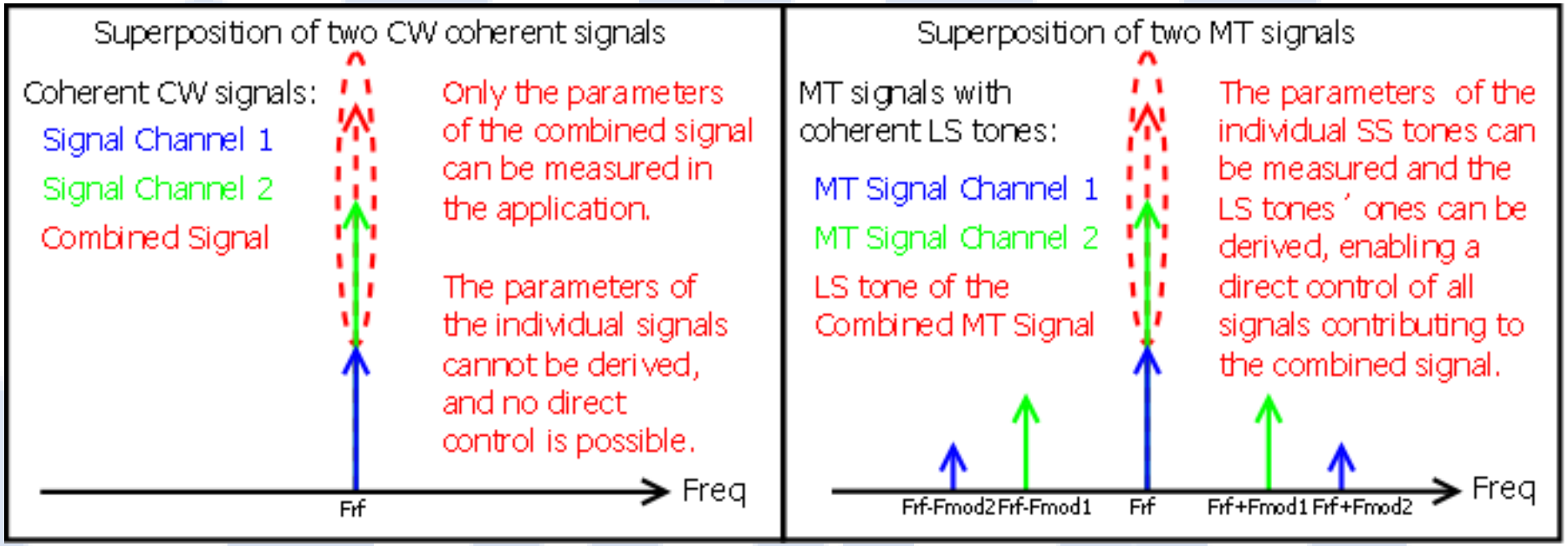

Comparison of the signals applied in a conventional and a MTEnergy-enabled 2-channel systems.

The combined signals on Frf are identical, the difference is in the presence of the small-signal tones on frequences Frf ± Fmod1,2 in the combined MT signal.

Why MTEnergy Technology?

MT Energy technology is a versatile tool, which delivers benefits (functionality, performance and cost) to all players in the solid-state RF/MW energy supply chain and to the end-users:

Suppliers of RF/MW power devices benefit from the relaxed requirements towards their products (i.e. parameters spread, sensitivity to environmental conditions, etc.), since the “MTEnergy technology enabled” generators can make use of “lower-grade” components.

Suppliers of high-power solid-state **RF/MW energy generators** benefit from:

- **reduced calibration** efforts during manufacturing
- **enhanced generator’s performance (i.e. efficiency)**, enabled by “in-process” monitoring and optimization algorithms, utilizing MTEnergy technology
- **relaxed cooling requirements and increased reliability**, due to the achieved lower power combination loss and increased efficiency

Why MTEnergy Technology?

OEMs of RF/MW energy systems are equipped to develop **products with higher quality and novel functionalities**, enabled by the simultaneous measurement of the parameters of all signals, probed everywhere in the system : in the RF channels, or in ”any” other point of the application area. These measurement make possible to:

- implement deterministic, **closed-loop control of important process parameters**, i.e. electromagnetic field distribution in the application area
- **calculate the reflection or transmission coefficients** to/from any port of the system at the instantaneous operating frequency, or in a given range around it
- sustain **best system performance by optimizing the parameters** of the applied RF signals (frequency, power level and phase), or tuning the applied impedance matching devices

Why MTEnergy Technology?

End users of MTEnergy-enabled systems **can rise the quality and increase the efficiency** of the executed processes by:

- **Creating and maintaining** during operation **hot or cold spots** in the processed substance, which is important for applications like food processing, hyperthermia treatment, etc.
- **Tracking and compensating the changes in the operational conditions**, which occur during the process execution:
  - **change** of the **properties** of the processed substance: dielectric properties, temperature, humidity
  - **change** of the spatial **position** of the target
  - **change of material state**, i.e. during plasma excitation

MTEnergy Technology fundamentals in brief

The advanced measurement capability of MTEnergy technology are enabled by the following features of the deployed MT signals:

- The large-signal tone carries almost all of the energy generated in the RF channel. It is phase coherent with the other large-signal tones employed in the system, and contributes to the execution of the planed action.
- The parameters of the small-signal tones are correlated to the parameters of the belonging large-signal tone. The frequences of the small-signal tones are unique and specific for each RF channel, therefore they can be unambiguously discriminated and analyzed.
- Consequently, using the correlation relationship between the parameters of the small- and large-signal tones, the parameters of the later can be deducted, even so in the presence of other coherent large-signal tones.

MTEnergy Technology fundamentals in brief

MTEnergy-enabled generators can generate the multi-tone RF signals using phase modulation:

$S_{MT_RF} = A_{RF}\cos(2\pi F_{RF}t+\phi_{RF} + S_{MOD})$,

where:

$S_{MOD} = A_{MOD}\cos(2\pi F_{MOD}t+\phi_{MOD}))$

The modulation index (A_{MOD}) must be low in order to ensure proper distribution of the power between the tones ($P_{LS} >> P_{SS}$).

The correlation between the parameters of the LS and SS tones are defined with the math identities describing the spectral components of the phase modulated signals.

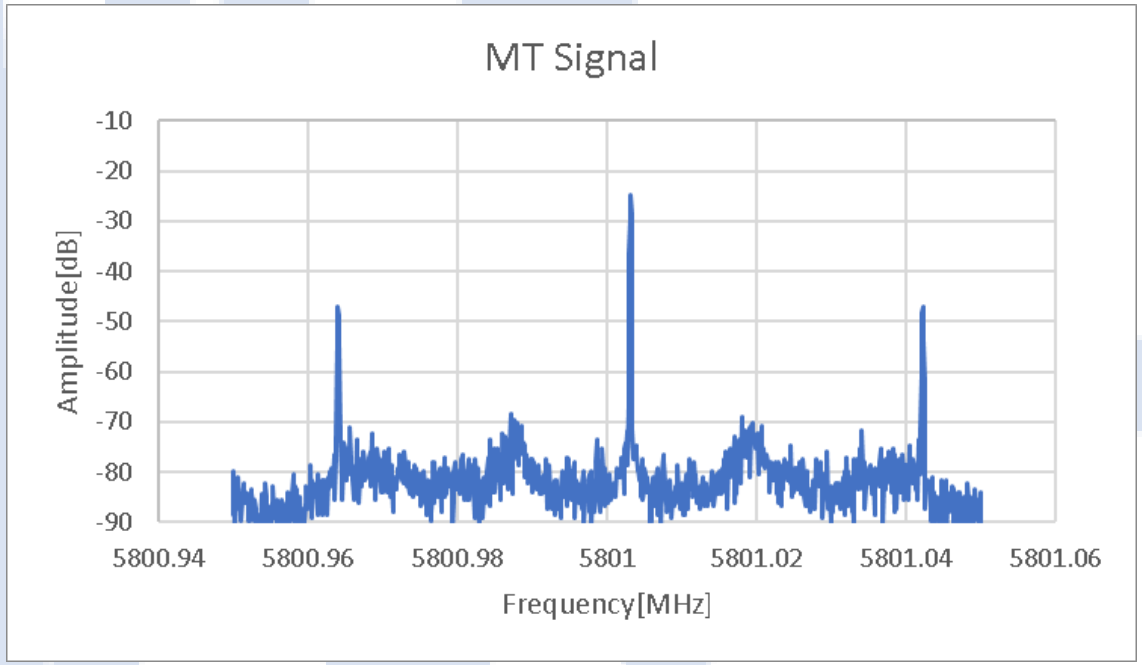

An example of 5.8GHz MT signal, generated using Fmod of about 40KHz.

MTEnergy Technology fundamentals in brief

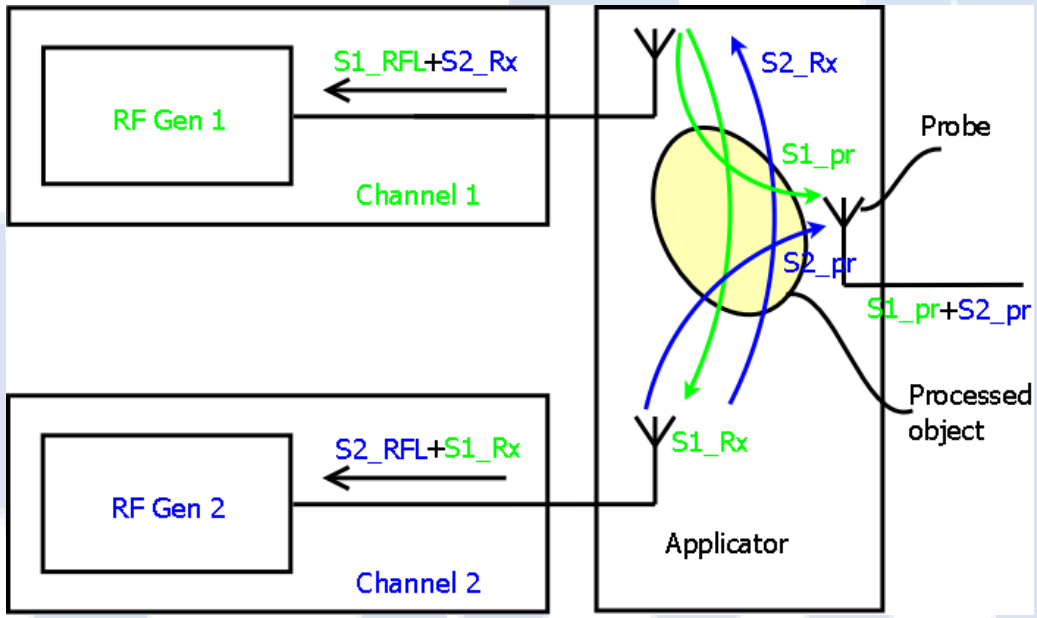

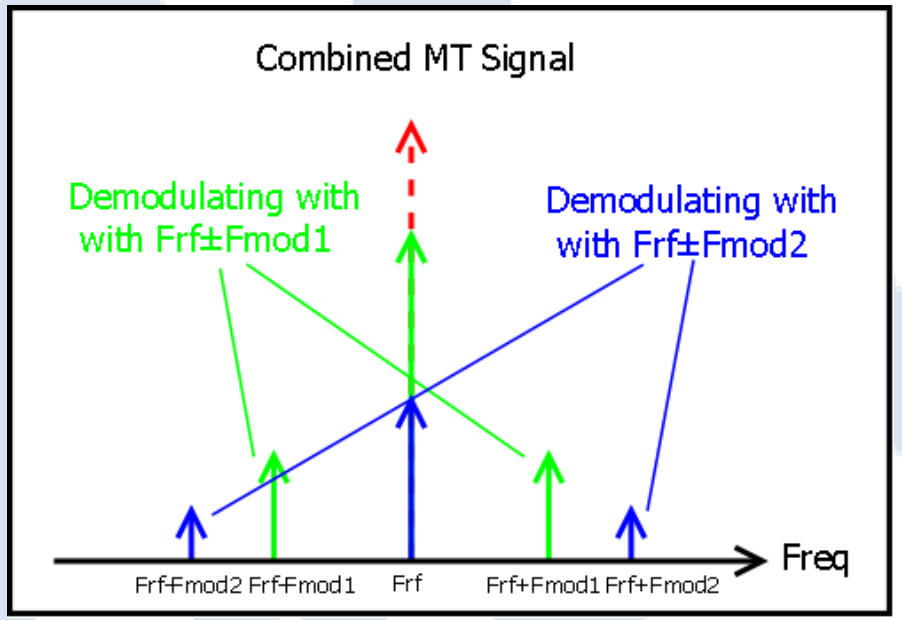

The signals, sampled in any point of a multichannel system, consists of multiple MT signals. The parameters of the SS tones of every MT signal can be measured by demodulating the sampled signal with the frequency of the respective SS tone, Frf±Fmod1 or Frf±Fmod2 in this example.

Using the identities, describing the correlation between MT signal's tones, each LS tone parameters can be calculated from the measured parameters of the affiliated SS tones.

Implementation options

Depending on the specific application's requirements, the technology implementation can be optimized according to any of the principal criteria: cost, functionality, operational conditions (i.e. frequency, power level), measurement performance, physical and other constrains, etc.

Therefore, a considerable number of implementation options would be appropriate, two being presented here:

- cost-effective topology
- flexible and feature rich topology

Implementation options - Cost effective

- The RF generators have conventional architecture
- The PLLs transfer the modulation to RF
- MT signals are generated by a pattern generator in the HF band, Fmod is low
- A single receiver measures the MT signals, probed in different points- no or simple calibration of the receiver function required
- Attention point –Fref_CW and Fref_MT shall be phase-aligned
- Beter suited for RF energy systems: HF and low UHF bands
- With some limitations, Generator LO (+PA) can be used as an RF energy source

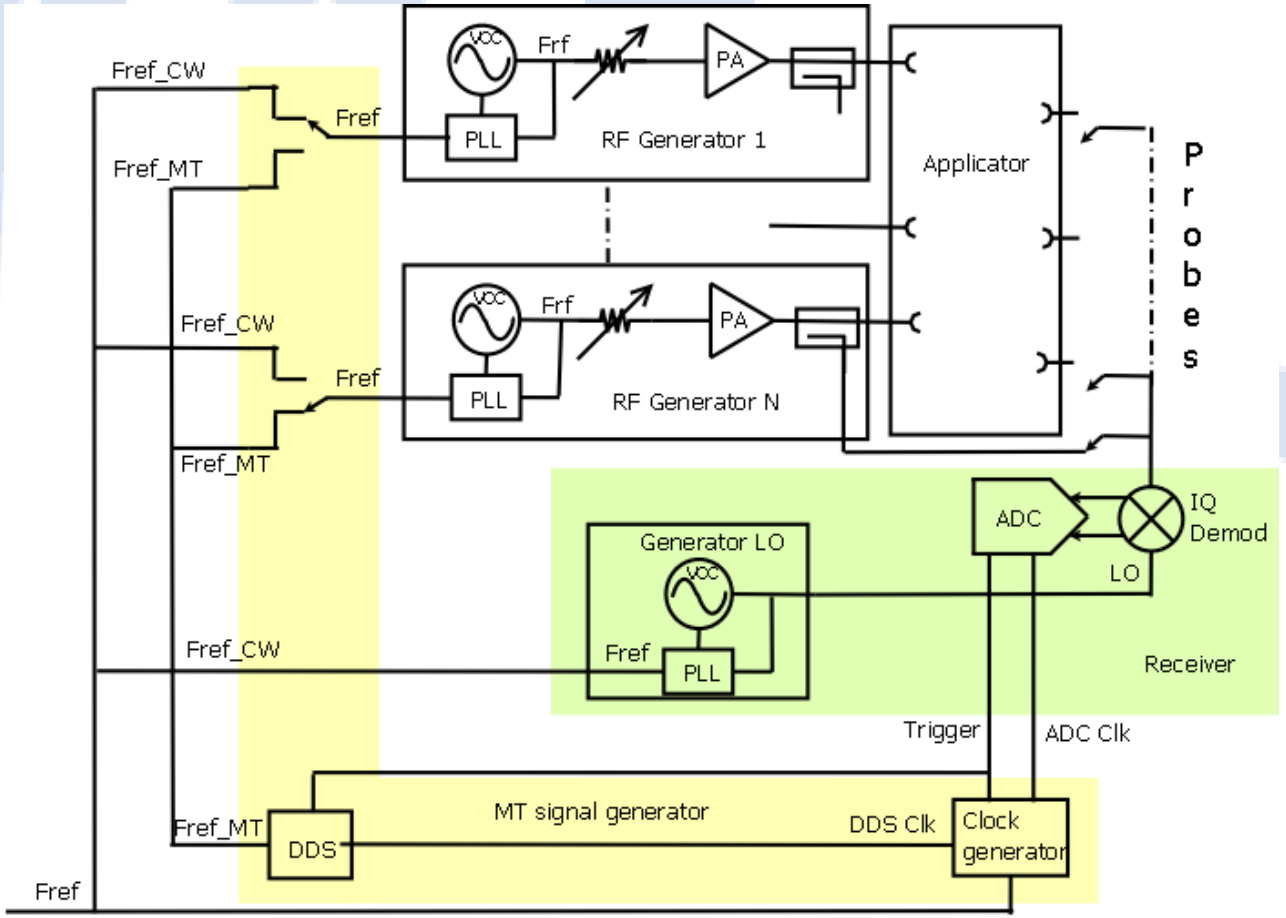

Implementation options – Feature rich

- All RF/MW generators are equipped with high-speed, agile pattern generators
- MT signals are generated in the RF/MW bands, modulation frequency up to tens of MHz
- The CW and MT IQ signals are generated by a single pattern generators, ensuring inherent phase alignment
- Applicable in all RF and MW bands
- Able to perform Hot S-parameters measurements

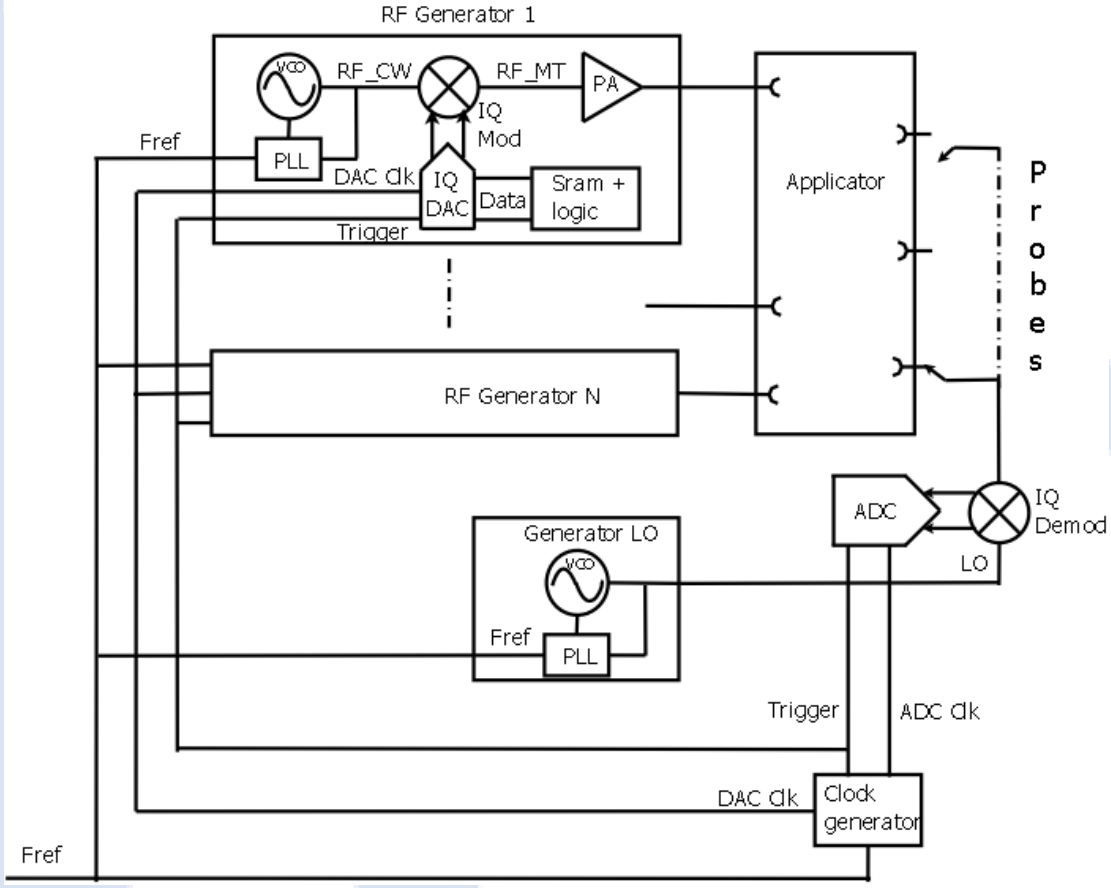

Applications examples: High power generator

- Based on the cost-effective topology
- Reduces the requirements towards the parametric spread of the used components
- Minimizes combination losses and increases efficiency
- Maintains optimal performance during operation
- No production calibration required
- Valuable option for designing very high-power RF and/or MW generators

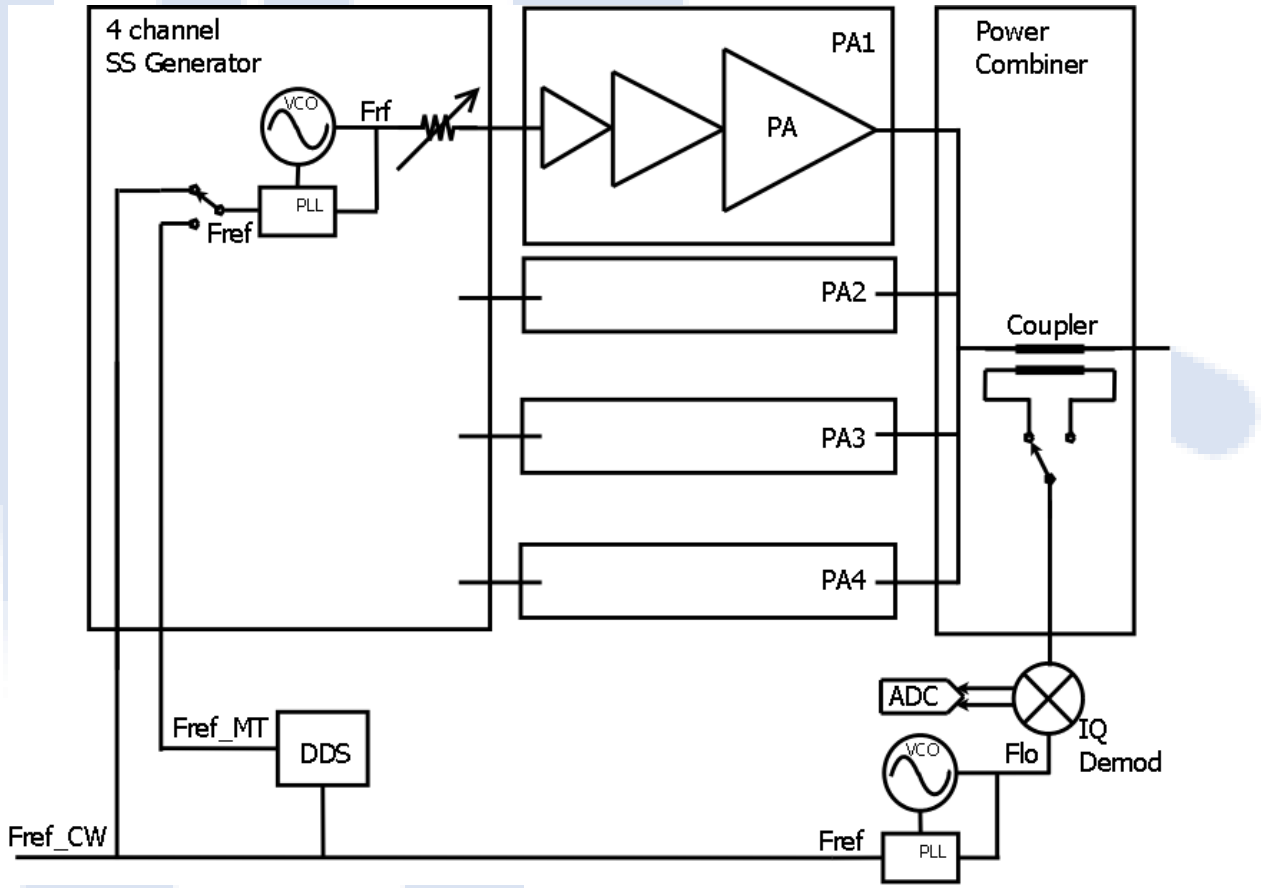

Applications examples: Hyperthermia system

MTEnergy technology delivers major performance and convenience benefits to the hyperthermia application:

- Ensures that all applied signals comply with the planed therapy scheme
- Assisted by the application model, used in the treatment planning, the technology enables advanced measurement and control algorithms, which ensure that:
  - The treated body part is aligned with the planed position
  - The treatment plan dynamically adapts to the detected, “not conforming” body position (likely, the application model should be extended with few additional body positions)

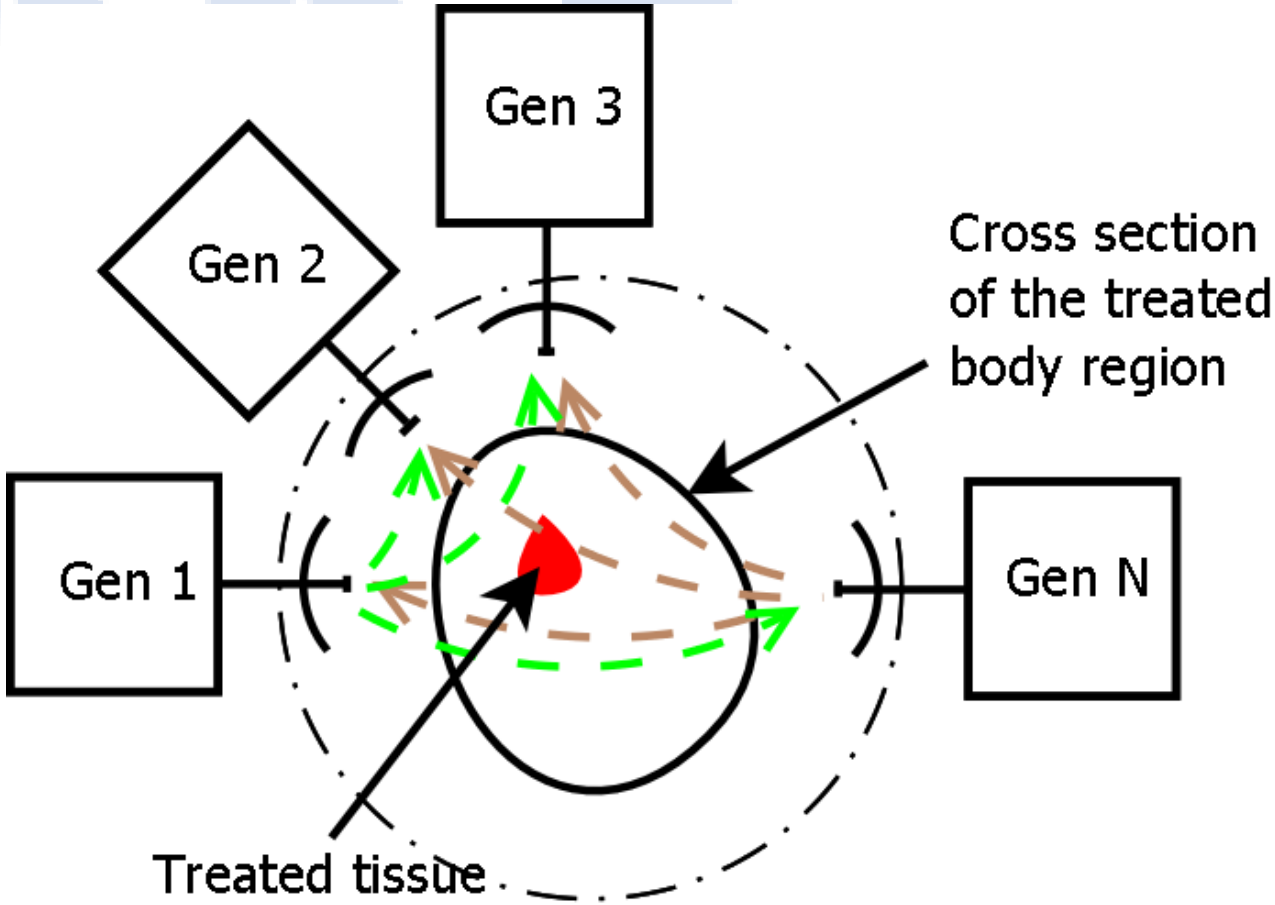

Applications examples: Hot S-parameter functionality

Some RF/MW applications (i.e. RF/MW excited plasma lighting bulbs, plasma jets, cancer ablation devices) may exhibit strong resonant, and varying input impedance behavior.

MTEnergy's Hot S-parameter feature provides a ready solution for in-process measurement of the frequency response of the RF/MW generator's load impedance, providing an input for the algorithms governing the applied compensation mechanisms, i.e. RF frequency tuning or adaptive tunning devices.

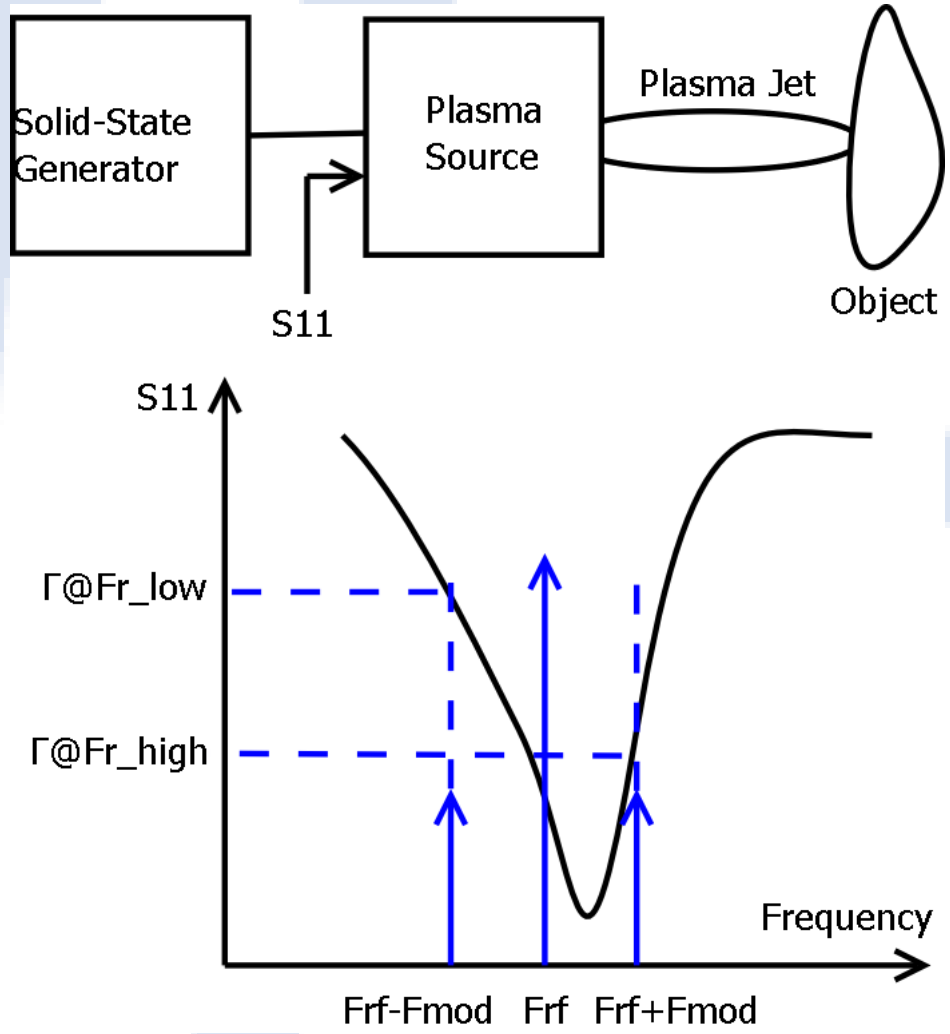

Performance of MTEnergy technology

MTEnergy's performance (i.e. accuracy, measurement speed) depends on the RF/MW frequency, used in application, and on a number of choices, made during the integration of the technology into the system.

The functionality and the performance level of the technology has been examined using AndivaTech's 5.8GHz, 2-channel demo system.

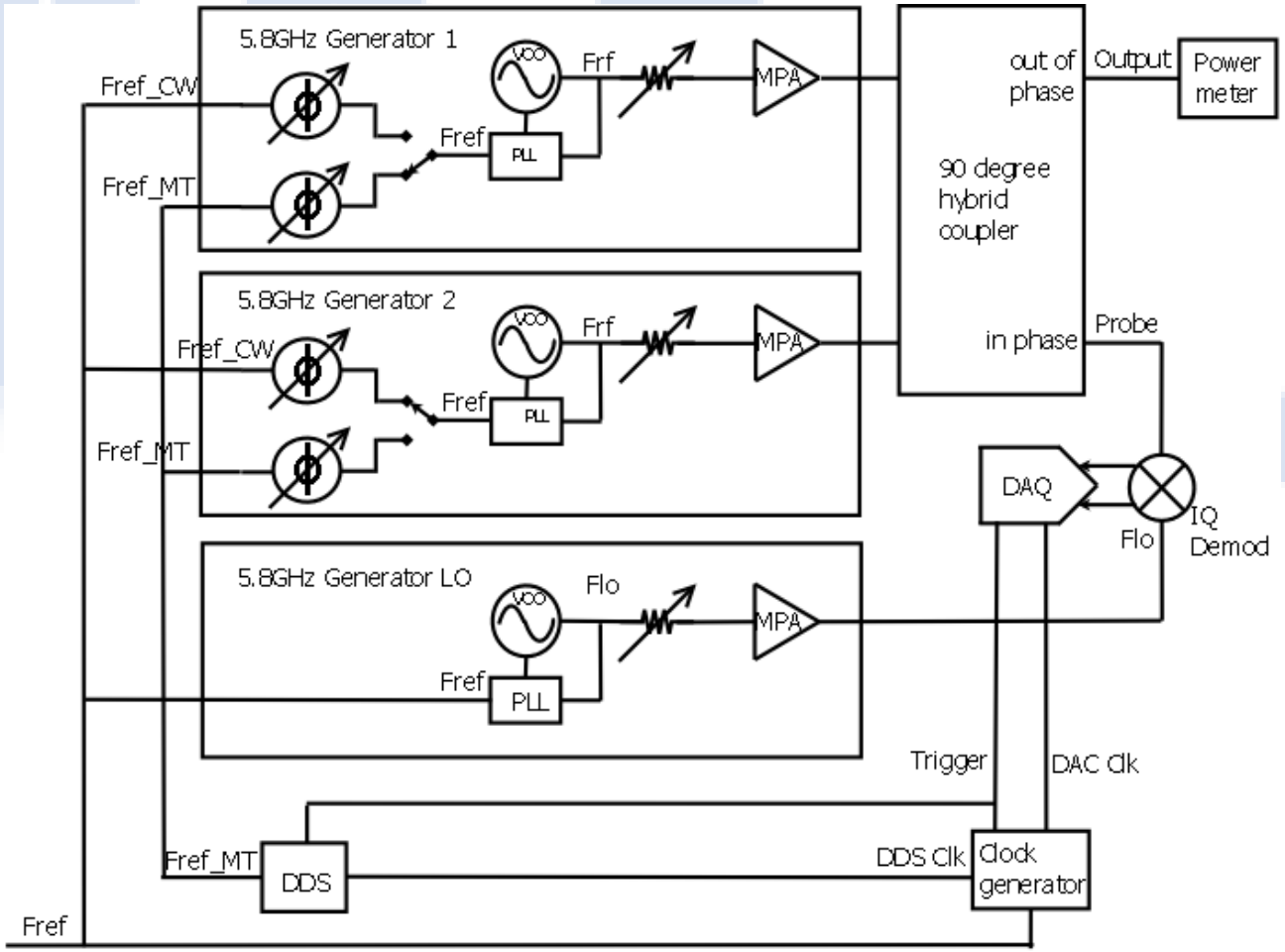

Performance of MTEnergy technology

During the evaluation, a closed-loop algorithm controls the phases of the generated signals, using the values, measured with MTEnergy technology.

The accuracy of the measurement and control functions was assessed based on the output power values, measured with different phase offsets between the channels' signals.

The comparison of the measured to the anticipated power values proved that the phase control accuracy is better than ±3 degrees.



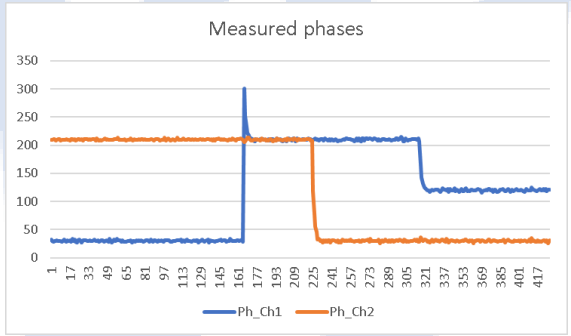

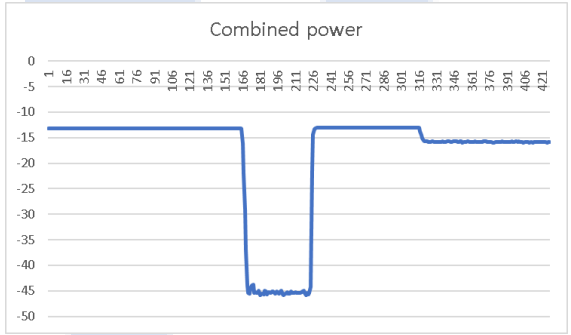

Conclusions

The developed MTEnergy technology presents an important innovation in the techniques, used for analysis and control of the solid-state RF/MW energy systems.

It provides a real-time, non-disruptive tool for measuring the parameters of all signals, applied in coherent, multi-channel RF/MW energy systems—a feature hitherto unattainable with the state-of-the-art architectures.

The technology offers functional, performants and cost benefits across various RF Energy applications: high-power generators, medical devices, plasma generators, etc., where the synchronization and control of multiple coherent channels is a paramount requirement.

Questions

Questions, comments, feedbacks are highly appreciated:

Email info@andivatech.com
Phone +31644139357

A comprehensive discussion on MTEnergy technology is available on AndivaTech's website:
https://andivatech.com/assets/MT%20Energy%20v2.0.pdf